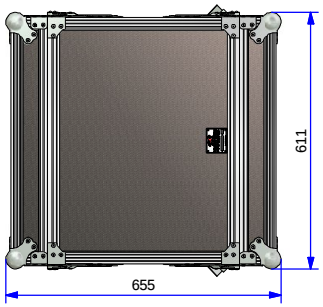

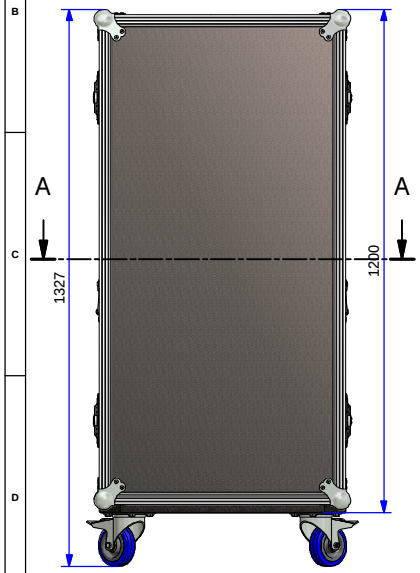

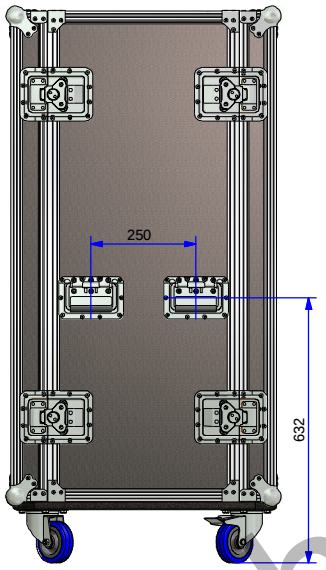

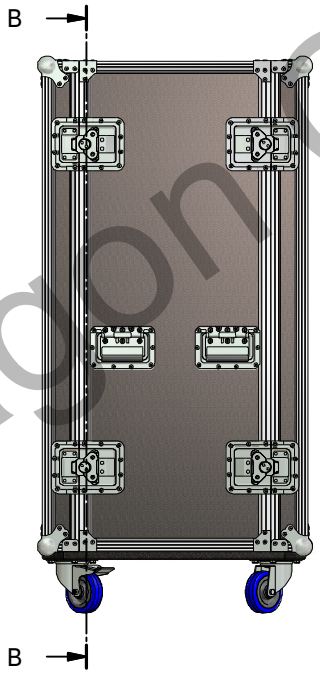

B-B (1 : 18)

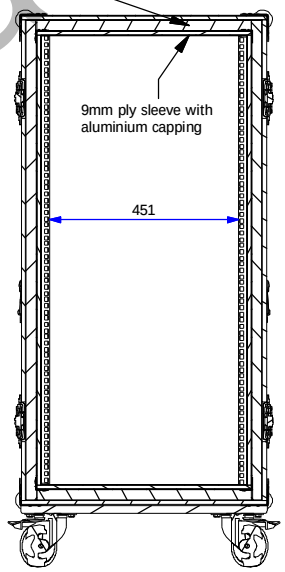

A-A (1 : 18)

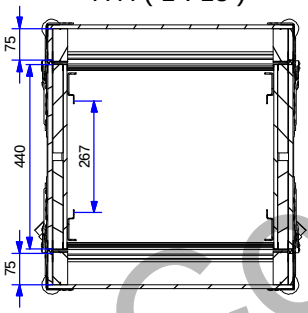

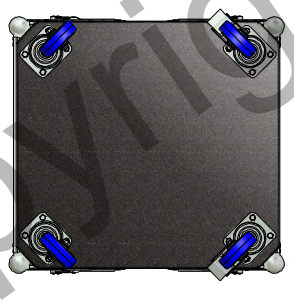

External Dimensions (excluding hardware): 587W x 633D x1168H

Parts List	
QTY	DESCRIPTION
8	T-Bracket B1131
8	L-Bracket 4043
8	Large Ball Corner 4101
4	Recessed Flip Handle 34082 + Backplate 34093
8	Large Cranked Butterfly Catch 172571
1	18mm Ply Castor Board
2	100mm Castor 3470 swivel
2	10mm Castor 3477 braked
8	Double Angle Bracket 4043
4	Double Full Hole Rackstrip R0883
1	Dragon Badge

Drawing no.: F1924UFS
Issue No: 1
Sheet: 1
Wall Thickness: 10mm
Wall Colour/Material: Laminate/Phenol faced ply
Hardware Details: See parts list.

Specifications:
1. Aluminium extrusions riveted through wall material every 100mm.
2. Bifurcated rivets to be used wherever possible.
3. All hardware zinc plated.
4. 9mm Ply enclosure with aluminium capping suspended with 25mm high density foam.
5. Rack rails front + rear.
6. Estimated weight - 56.7kgs.

Title: 24u Foam Suspended Rack Flightcase with 440mm Sleeve
Drawn by: JB
Date: 28/10/2008
Company: AN Other

ALL DIMENSIONS IN MILLIMETRES
3rd ANGLE PROJECTION
DO NOT SCALE

THIS DRAWING IS COPYRIGHTED BY DRAGON CASES. IT MUST NOT BE COPIED OR DISCLOSED WITHOUT CONSENT OF THE OWNER

DRAGON CASES
in partnership with Nomad PLC
tel: 01633 791590
fax: 01633 791531

Copyright Dragon Cases

Copyright Dragon Cases