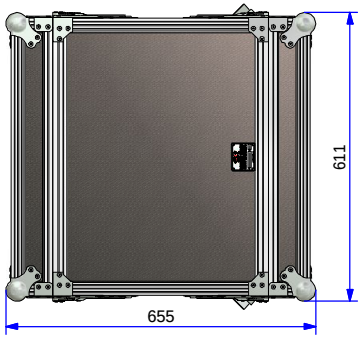

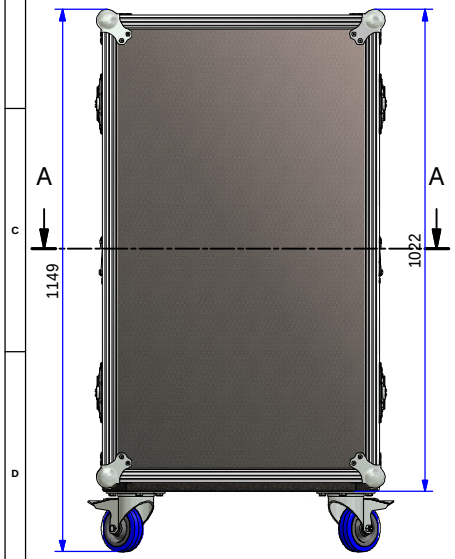

A-A (1 : 16)

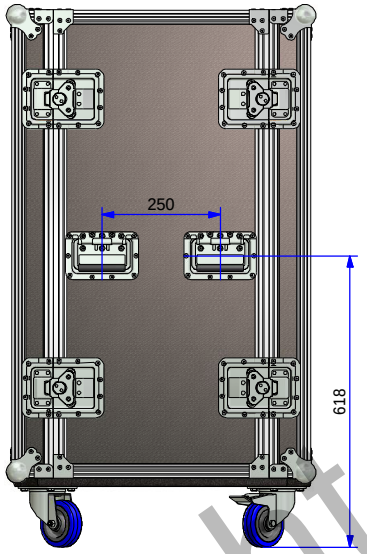

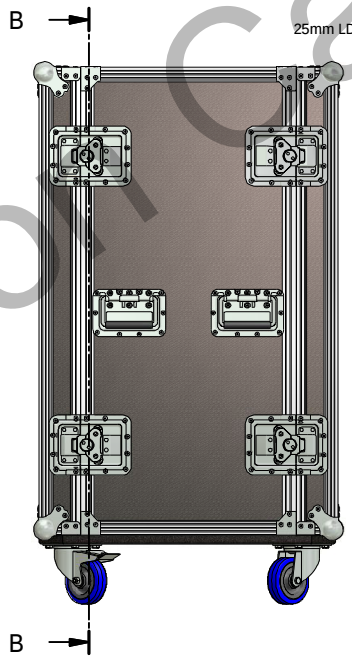

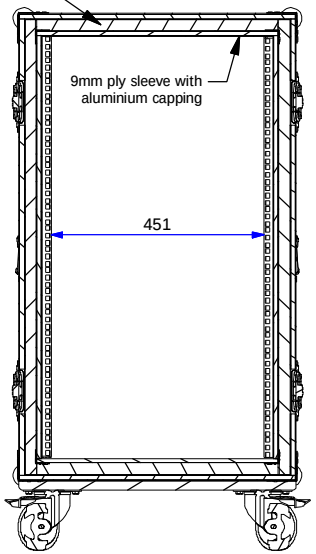

B-B (1 : 16)

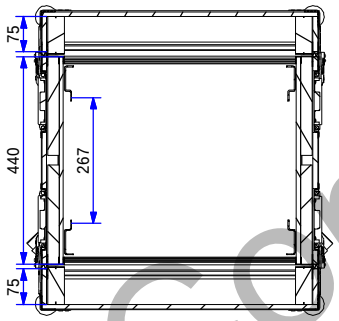

External Dimensions (excluding hardware): 587W x 633D x 990H

Parts List	
QTY	DESCRIPTION
8	T-Bracket B1131
8	L-Bracket 4043
8	Large Ball Corner 4101
4	Recessed Flip Handle 34082 + Backplate 34093
8	Large Cranked Butterfly Catch 172571
1	18mm Ply Castor Board
2	100mm Castor 3470 swivel
2	100mm Castor 3477 braked
8	Double Angle Bracket 4043
4	Double Full Hole Rackstrip R0883
1	Dragon Badge

Drawing no.:	Issue No:	Sheet:	Wall Thickness:	Wall Colour/Material:	Hardware Details:
F1920UFS	1	1	10mm	Laminate/Phenol faced ply	See Parts List

Title:	Drawn by:	Company:
20u Foam Suspended Rack Flightcase with 440mm Sleeve	IC	AN Other
	Date: 28/10/2008	

Specifications:
1. Aluminium extrusions riveted through wall material every 100mm.
2. Bifurcated rivets to be used wherever possible.
3. All hardware zinc plated.
4. 9mm Ply enclosure with aluminium capping suspended with 25mm high density foam.
5. Rack rails front + rear.
6. Estimated weight - 51.9kgs

ALL DIMENSIONS IN MILLIMETRES

3rd ANGLE PROJECTION

DO NOT SCALE

THIS DRAWING IS COPYRIGHTED BY DRAGON CASES. IT MUST NOT BE COPIED OR DISCLOSED WITHOUT CONSENT OF THE OWNER

DRAGON CASES
in partnership with Nomad PLC
tel: 01633 791590
fax: 01633 791531

Copyright Dragon Cases

Copyright Dragon Cases