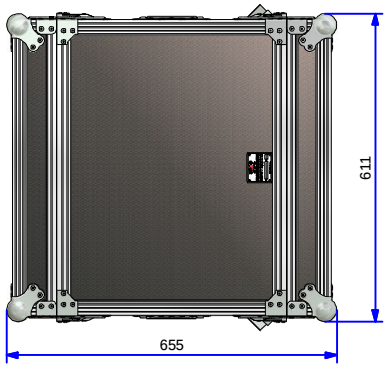

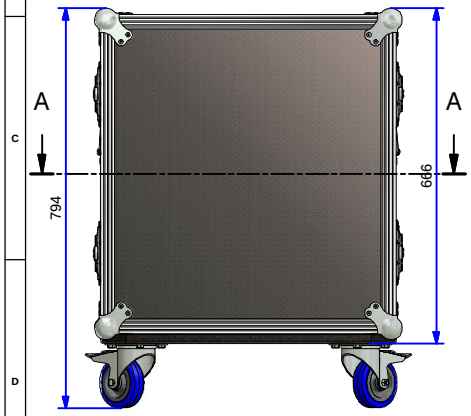

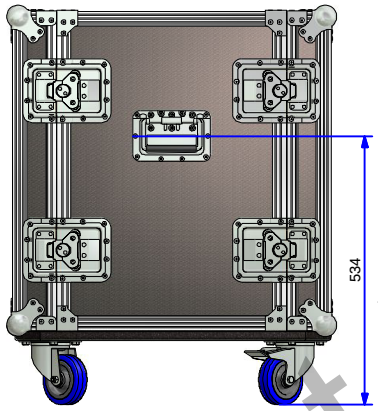

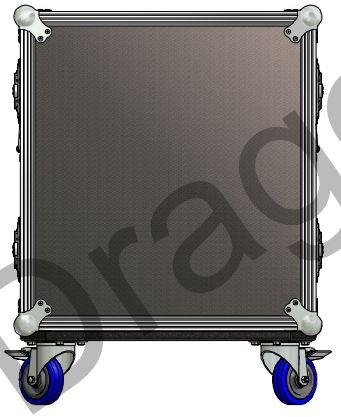

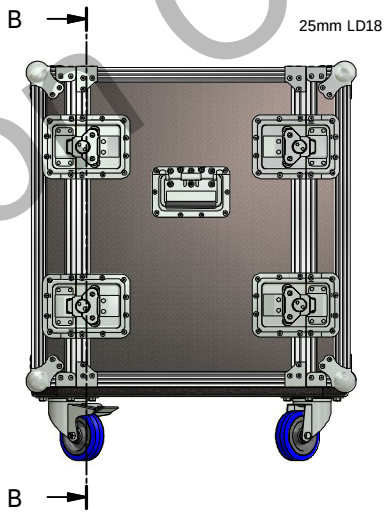

B-B (1 : 15)

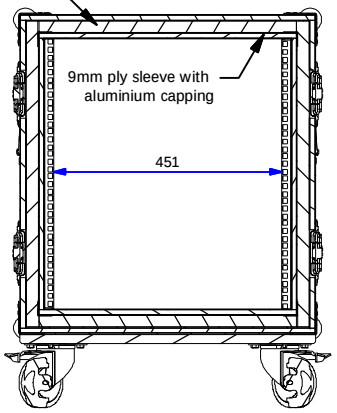

A-A (1 : 15)

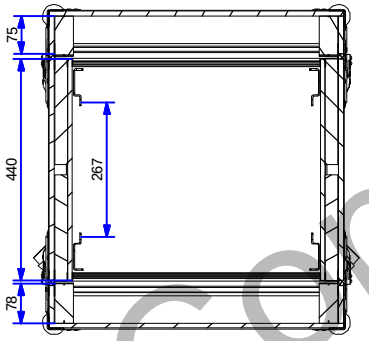

External Dimensions (excluding hardware): 587W x 633D x 634H

Parts List	
QTY	DESCRIPTION
8	T-Bracket B1131
8	L-Bracket 4043
8	Large Ball Corner 4101
2	Recessed Flip Handle 34082 + Backplate 34093
8	Large Cranked Bautterfly Catch 172571
1	18mm Ply Castor Board
2	100mm Castor 3470 swivel
2	10mm Castor 3477 braked
4	Double Full Hole Rackstrip R0883
1	Dragon Badge

Drawing no.: F1912UFS	Issue No: 1	Sheet: 1	Wall Thickness: 10mm	Wall Colour/Material: Laminate/Phenol faced ply	Hardware Details: See parts list.
Title: 12u Foam Suspended Rack Flightcase with 440mm Sleeve			Drawn by: IC Date: 28/10/2008	Company: AN Other	

Specifications:
1. Aluminium extrusions riveted through wall material every 100mm.
2. Bifurcated rivets to be used wherever possible.
3. All hardware zinc plated.
4. 9mm Ply enclosure with aluminium capping suspended with 25mm high density foam.
5. Rack rails front + rear.
6. Estimated weight - 41.1kgs.

ALL DIMENSIONS IN MILLIMETRES

3rd ANGLE PROJECTION

DO NOT SCALE

THIS DRAWING IS COPYRIGHTED BY DRAGON CASES. IT MUST NOT BE COPIED OR DISCLOSED WITHOUT CONSENT OF THE OWNER

DRAGON CASES
in partnership with Nomad PLC
tel: 01633 791590
fax: 01633 791531

Copyright Dragon Cases

Copyright Dragon Cases